MONNIT®

The Leader in Low-Cost, Remote Monitoring Solutions

Ω

RESISTANCE

Wireless Resistance Sensor

General Description

The Monnit Wireless Resistance Sensor reports the resistance across a load. It can be connected to any kind of passive (no voltage) variable resistance device.

- Measures up to 145 KOhms.
- Accurate to ± 1.5% (FS) with user calibration.
- Interfaces with any variable resistance device.

Free iMonnit basic online wireless sensor monitoring and notification system to configure sensors, view data and set alerts via SMS text and email.

Principle of Operation

The Monnit Wireless Resistance Sensor reads the resistance across any resistive device and reports back the measured resistance. The resistance sensor leads are meant to connect to passive devices only, connecting the sensor leads to any voltage or power source may damage the sensor. It is programmed to sleep for a user-given time interval (heartbeat) and then wake up, convert the analog data, mathematically compute the resistance, and transmit the data to the gateway, where it is then logged into the cloud service. The user can configure defined thresholds and have the system alert on threshold breaches.

Example Applications

- Resistance Monitoring
- Battery Monitoring
- Transducer Interfacing
- And many more...

Monnit Sensor Core Specifications

- Wireless Range: 250 - 300 ft. (non-line-of-sight / indoors / through walls, ceilings & floors) *
- Communication: RF 900, 920, 868 and 433 MHz
- Power: Replaceable batteries (optimized for long battery life, line-power (AA version) and solar (Industrial version) options are available). ERP is 5,7 mW
- Battery Life (at 1 hour heartbeat setting): **

AA battery >	4-8 years
Coin Cell >	2-3 years.
Industrial >	4-8 years

* Actual range may vary depending on environment.

** Battery life is determined by sensor reporting frequency and other variables.

Sensor Types & Options

Wireless Resistance Sensor (AA) 2

Wireless Resistance Sensor (Coin Cell) 3

Wireless Resistance Sensor (Industrial) 4

Notes 5

Wireless Resistance Sensor (AA)

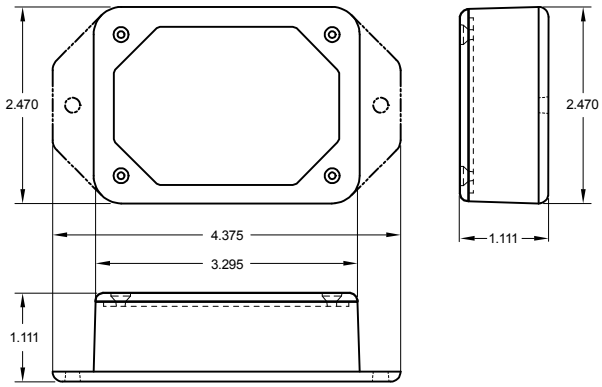

Technical Specifications	
Supply Voltage	2.0 - 3.6 VDC (3.0 - 3.6 VDC Using Power Supply) *
Current Consumption	0.7 µA (sleep mode) 2 mA (radio idle/off mode) 2 mA (measurement mode) 25 mA (radio RX mode) 35 mA (radio TX mode)
Operating Temperature Range (Board Circuitry and Batteries)	-18°C to 55°C (0°F to 130°F) using alkaline -40°C to 85°C (-40°F to 185°F) using lithium **
Optimal Battery Temperature Range (AA)	+10°C to +50°C (+50°F to +122°F)
Resistive Range (in Ohms)	0 – 145000***
Specific Resistive Ranges (in Ohms)	0 – 530, 530 – 3500, 3500 – 27200, 27200 - 145000
Resolution (in Ohms)	2047 Unique Values Per Specific Range (11 bit): ~.25, ~1.71, ~13.3, ~70.8.
Accuracy	+/- 3% FS of Specific Range
User Calibrated Accuracy	+/- 1.5% FS of Specific Range****
Lead Wire Length	1 ft. (12 in.)
Weight	4.0 oz.
Wireless Range	250 - 300 ft. (Through walls, ceilings and floors) Range may vary according to environmental variables
Certifications FC CE Industry Canada	900 MHz product; FCC ID: ZTL- RFSC1 and IC: 9794A-RFSC1. 920 MHz product; ARIB STD-T108 R210-103733. 868 and 433 MHz product tested and found to comply with: CISPR 22:2008-09 / EN 55022:2010 - Class B and ETSI EN 300 220-2 V2.4.1 (2012-05).

* Hardware cannot withstand negative voltage. Please take care when connecting a power device.

** At temperatures above 100°C, it is possible for the board circuitry to lose programmed memory.

*** The sensor is capable of measuring above 145000 Ohms but may not meet the specified accuracy above this value.

**** For a valid calibration, the resistance under measurement must be maintained in circuit for 1 data transmission before calibration and 1 data transmission after calibration. Calibration is only applied to the specific resistive range, for best results calibrate at a resistance between 10% and 90% of the specific range. In general, calibrating between the 50% and 90% points of the specific range will yield better calibration results for the entire range.

Power Options

Two replaceable 1.5V AA sized batteries are included with the stanadard model. A line-power version with battery backup is also available - allowing it to be powered by a standard 3.0 - 3.6V power supply and use the internal batteries if there is a power interruption.

Power options must be selected at time of purchase as the internal hardware of the sensor must be changed to support the selected power requirements.

Wireless Resistance Sensor (Coin Cell)

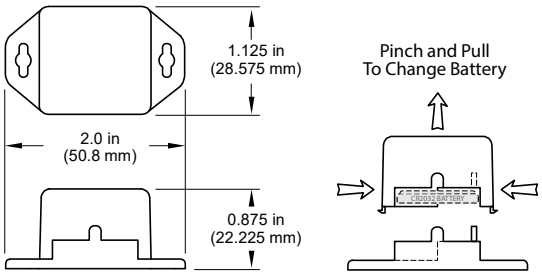

Technical Specifications	
Supply Voltage	2.0 - 3.6 VDC *
Current Consumption	0.7 µA (sleep mode) 2 mA (radio idle/off mode) 2 mA (measurement mode) 25 mA (radio RX mode) 35 mA (radio TX mode)
Operating Temperature Range (Board Circuitry and Batteries)	-7°C to +60°C (20°F to +140°F)**
Optimal Battery Temperature Range (AA)	+10°C to +50°C (+50°F to +122°F)
Resistive Range (in Ohms)	0 – 145000***
Specific Resistive Ranges (in Ohms)	0 – 530, 530 – 3500, 3500 – 27200, 27200 - 145000
Resolution (in Ohms)	2047 Unique Values Per Specific Range (11 bit): ~.25, ~1.71, ~13.3, ~70.8.
Accuracy	+/- 3% FS of Specific Range
User Calibrated Accuracy	+/- 1.5% FS of Specific Range****
Lead Wire Length	1 ft. (12 in.)
Weight	1.0 oz.
Wireless Range	250 - 300 ft. (Through walls, ceilings and floors) Range may vary according to environmental variables
Certifications FC CE Industry Canada	900 MHz product; FCC ID: ZTL- RFSC1 and IC: 9794A-RFSC1. 920 MHz product; ARIB STD-T108 R210-103733. 868 and 433 MHz product tested and found to comply with: CISPR 22:2008-09 / EN 55022:2010 - Class B and ETSI EN 300 220-2 V2.4.1 (2012-05).

* Hardware cannot withstand negative voltage. Please take care when connecting a power device.

** At temperatures above 100°C, it is possible for the board circuitry to lose programmed memory.

*** The sensor is capable of measuring above 145000 Ohms but may not meet the specified accuracy above this value.

**** For a valid calibration, the resistance under measurement must be maintained in circuit for 1 data transmission before calibration and 1 data transmission after calibration. Calibration is only applied to the specific resistive range, for best results calibrate at a resistance between 10% and 90% of the specific range. In general, calibrating between the 50% and 90% points of the specific range will yield better calibration results for the entire range.

Power Options

Sensors are powered by a replaceable 3.0 V coin cell battery. Optional AA battery powered sensors are available. The AA version of these sensors are larger in size (3" [L] x 2.1" [W] x 1.2" [H]) and include two long-life AA batteries.

It is recommended that unless you are using the AA battery solution, you set heartbeat to no faster than one hour to preserve battery life.

PinchPower™ Enclosure

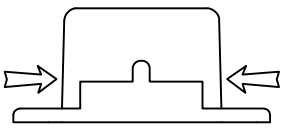

Pinch
(press in on the sides)

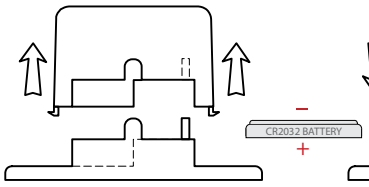

Pull
(sensor away from base)

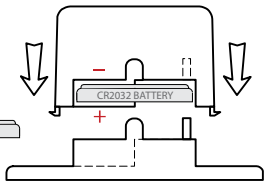

Press
(sensor back into base)

Wireless Resistance Sensor (Industrial)

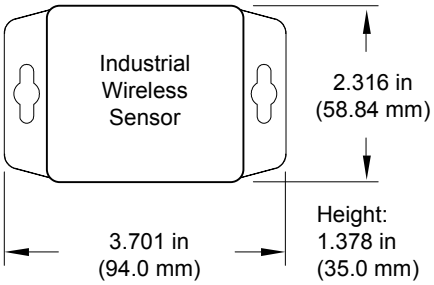

Technical Specifications		
Supply Voltage		2.0 - 3.6 VDC *
Current Consumption		0.7 µA (sleep mode) 2 mA (radio idle/off mode) 2 mA (measurement mode) 25 mA (radio RX mode) 35 mA (radio TX mode)
Operating Temperature Range (Board Circuitry and Battery)		
Included Battery	Max Temperature Range:	-40°C to +85°C (-40°F to +185°F) **
	Capacity:	1800 mAh
Optional Solar Feature	Solar Panel:	5VDC / 30mA (53mm x 30mm)
	Charging Temperature Range:	0° to 45°C (32° to 113°F)
	Max Temperature Range:	-20° to 60°C (-4° to 140°F)
	Included Rechargeable Battery:	600 mAh / >2000 Charge Cycles (80% of initial capacity)
Resistive Range (in Ohms)		0 – 145000***
Specific Resistive Ranges (in Ohms)		0 – 530, 530 – 3500, 3500 – 27200, 27200 - 145000
Resolution (in Ohms)		2047 Unique Values Per Specific Range (11 bit): ~.25, ~1.71, ~13.3, ~70.8.
Accuracy		+/- 3% FS of Specific Range
User Calibrated Accuracy		+/- 1.5% FS of Specific Range****
Lead Wire Length		1 ft. (12 in.)
Weight		4.7 oz. (solar version 5.1 oz)
Enclosure Rating		NEMA 1, 2, 4, 4x, 12 and 13 rated, sealed & weather proof
UL Rating		UL Listed to UL508-4x specifications (File E194432)
Wireless Range		250 - 300 ft. (Through walls, ceilings and floors) Range may vary according to environmental variables
Certifications FC CE Industry Canada		900 MHz product; FCC ID: ZTL- RFSC1 and IC: 9794A-RFSC1. 920 MHz product; ARIB STD-T108 R210-103733. 868 and 433 MHz product tested and found to comply with: CISPR 22:2008-09 / EN 55022:2010 - Class B and ETSI EN 300 220-2 V2.4.1 (2012-05).

* Hardware cannot withstand negative voltage. Please take care when connecting a power device.

** At temperatures above 100°C, it is possible for the board circuitry to lose programmed memory.

*** The sensor is capable of measuring above 145000 Ohms but may not meet the specified accuracy above this value.

**** For a valid calibration, the resistance under measurement must be maintained in circuit for 1 data transmission before calibration and 1 data transmission after calibration. Calibration is only applied to the specific resistive range, for best results calibrate at a resistance between 10% and 90% of the specific range. In general, calibrating between the 50% and 90% points of the specific range will yield better calibration results for the entire range.

Solar Power Option

Monnit Industrial Sensors are powered by a replaceable 3.6V Lithium battery (included). An optional solar powered version is also available. The solar powered sensor uses a Lithium Iron Phosphate rechargeable battery in conjunction with a solar power cell to extend battery life.

Notes

Commercial Grade Sensors

Monnit commercial grade sensors are designed for applications in ordinary environments (normal room temperature, humidity and atmospheric pressure). Do not use these sensors under the following conditions as these factors can deteriorate the product characteristics and cause failures and burn-out.

- Corrosive gas or deoxidizing gas - chlorine gas, hydrogen sulfide gas, ammonia gas, sulfuric acid gas, nitric oxides gas, etc.).
- Volatile or flammable gas.
- Dusty conditions.
- Under low or high pressure.
- Wet or excessively humid locations.
- Places with salt water, oils chemical liquids or organic solvents.
- Where there are excessively strong vibrations.
- Other places where similar hazardous conditions exist.

Use these products within the specified temperature range. Higher temperature may cause deterioration of the characteristics or the material quality.

Industrial Grade Sensors - Type 1, 2, 4, 4X, 12 and 13 NEMA Rated Enclosure

Monnit's Industrial sensors are enclosed in reliable, weatherproof NEMA rated enclosures. Our NEMA rated enclosures are constructed for both indoor or outdoor use and protect the sensor circuitry against the ingress of solid foreign objects like dust as well as the damaging effects of water (rain, sleet, snow, splashing water, and hose directed water).

- Safe from falling dirt.
- Protects against wind-blown dust.
- Protects against rain, sleet, snow, splashing water, and hose directed water
- Increased level of corrosion resistance
- Will remain undamaged by ice formation on the enclosure

For more information about our products or to place an order, please contact our sales department at 801-561-5555.

Visit us on the web at www.monnit.com.

Monnit Corporation
3400 South West Temple
Salt Lake City, UT 84115
801-561-5555
www.monnit.com

Monnit, iMonnit and all other trademarks are property of Monnit, Corp.
© 2017 Monnit Corp. All Rights Reserved.